.hmc. DUST SUPPRESSION

Important Features

.hmc. AUTOMATIC DFDS SYSTEM (DRY FOG DS SYSTEM)

- **RELIABLE & RUGGED DUST SUPPRESSION SYSTEM FOR CORE SECTOR.**
- **NON ELECTRICAL SPRAY ACTUATOR (FAV-100-FLOW ACTVATION VALVE)** FOR CONVEYOR BELT TRANSFER POINTS (DFDS) BUILT-IN WATER SUPPLY VALVE IN THE EQUIPMENT, WHICH OPENS ONLY ON ROTATION OF WHEEL AND WILL SPRAY ONLY WHEN BELT IS MOVING WITH LOAD AND STOPS SPRAYING WHEN BELT IS STATIONARY, EQUIPMENT OPERATES ONLY WHEN BELT IS IN CONTRACT WITH CONVEYOR BELT, HOWEVER LIGHT IS THE LOAD ON THE BELT.

MAKING SURE THERE IS NO WASTAGE OF PRECIOUS WATER. (SPRAYS ON LOADED BELT)

- **NO ELECTRICAL CABLING / NO SOLENOID VALVE (POWER SAVED = POWER PRODUCED)**
- **NO LAYING OF CABLING (SAVE IN EXTRA INSTALLATION COST)**
- **NO EXTRA POWER SUPPLY IS NEEDED TO OPERATE THE SYSTEM**
- **AUTOMATIC ACTIVATION OF SYSTEM (ON/OFF)**
- **NO MAN POWER REQUIRED TO ACTIVATE SYSTEM (WILL START WITH BELT MOTION)**
- **100% FAIL-PROOF (MECHANICAL-ACTIVATION)**
- **OPERATES AT BELTS SPEED FROM 100FT/MIN TO 750 FT/MIN.**
- **MAXIMUM WORKING PRESSURE 105 BAR**
- **NO CHEMICALS IS USED**
- **BEST PERFORMANCE CAN BE EXPECTED FOR DFDS WATER PRESSURE MAX 1-BAR & AIR 3.5-BAR**
- **AVOIDS OVER WETTING OF BELT, WHICH CAUSES SLIPPING & OVER MAINTENANCE IN ALL STAGE.**
- **SYSTEM CAN BE INSTALLED IN MAX. 4HRS TIME WITHOUT ANY MODIFICATION**
- **SPACE REQUIRED IS UNDER THE BELT, NO DUCTING, & INSTALLATION OF BAG / FILTERS ETC.**
- **ENGINEERED SYSTEM & CUSTOM DESIGNED TO EVERY SPECIFIC NEED.**
- **REDUCES PERIODICAL CLEAN-UP & SYSTEM FAILURE**
- **MAXIMUM RETURN ON INVESTMENT (YEARS OF TROUBLE FREE SERVICE)**
- **MINIMUM MAINTENANCE / OPERATING COST / DOWNTIME (MORE – PRODUCTION / CLEANER ENVIRONMENT)**

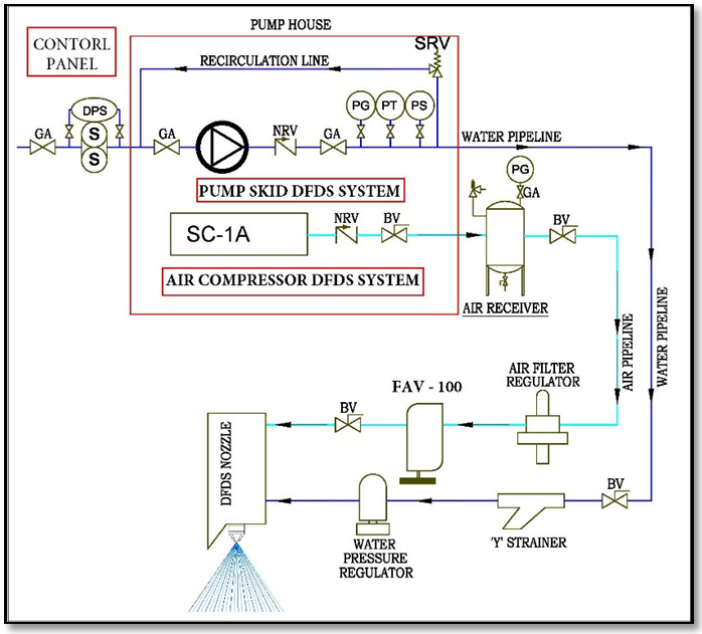

- **COMPLETE SYSTEM CONSISTING OF MECHANICAL SPRAY ACTUATOR / SPRAY BAR / DFDS NOZZLE / "Y" STRAINER / BALL VALVE / AIRFILTER REGULATOR / WATER PRESSURE REGULATOR / AIR COMPRESSOR / RECEIVER / WATER PUMP / MCC PANEL / GI PIPES & REQUIRED INSTRUMENTS.**

➢ **SYSTEM OPERATING IN ALL NTPC-CHP / COAL INDIA LTD / CEMENT / STEEL / STATE POWER PLANTS & NMDC**

INTERNATIONAL ACCREDITATION SERVICE®

.HMC Equipments Private Limited.

(AN ISO 9001:2015 CERTIFIED)
CONTROLLING ENVIRONMENT
PLOT No. 4, BLOCK D, SECTOR A, INDUSTRIAL AREA SIRGITTI, BILASPUR – 495004, CHHATTISGARH
Cell: +91 94252-19536, 78989-89885, E-mail: info@hmcindia.co.in, Web: www.hmcindia.co.in

INTERNATIONAL IAF ACCREDITATION FORUM